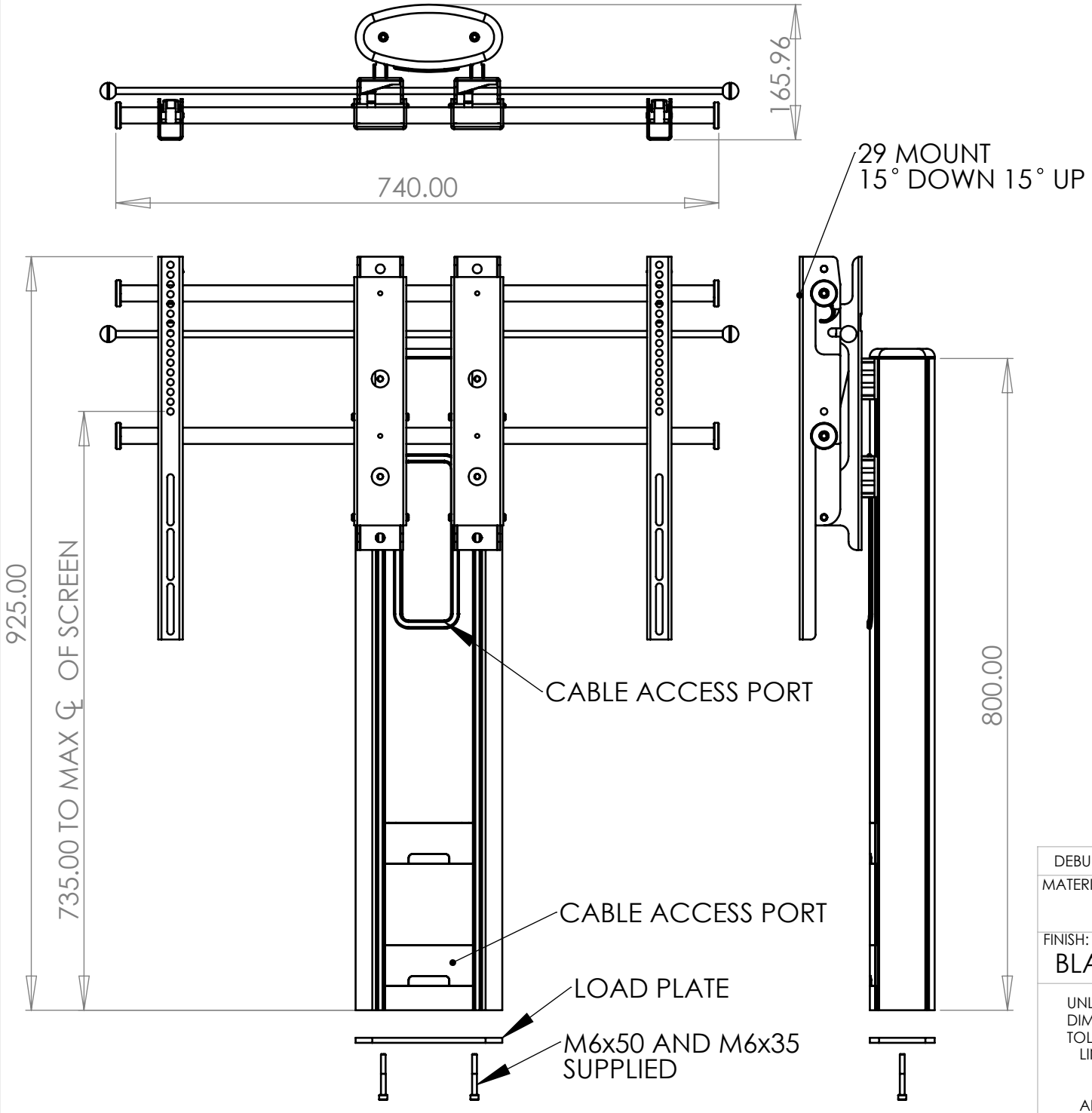

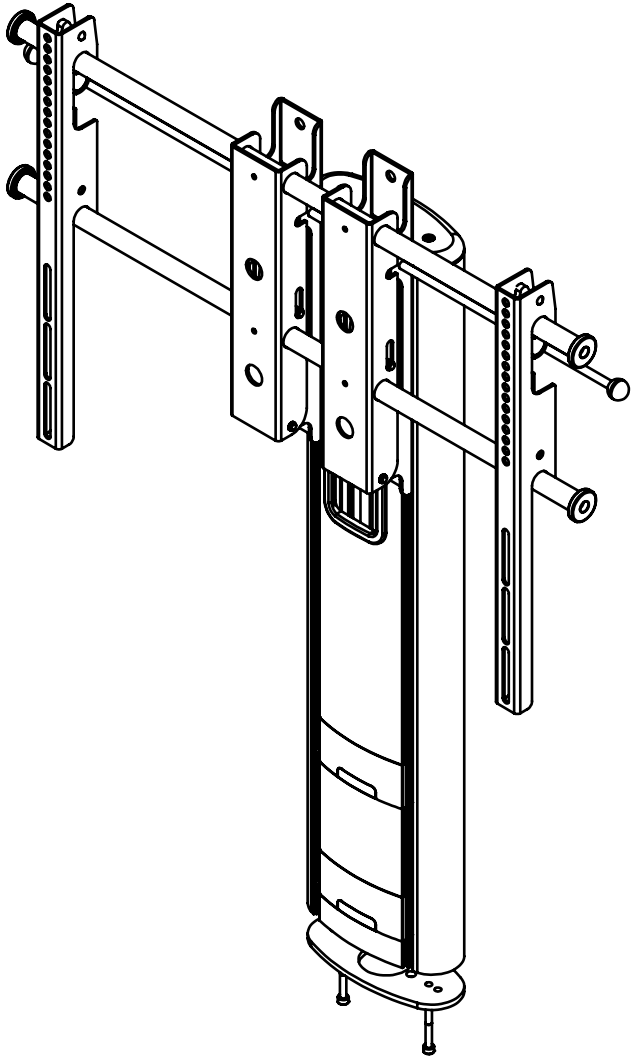

DEBUR AND BREAK SHARP EDGES	**Mode-AL.com** UNIT 4 ANAMAX IND. PARK. OXFORD ROAD, TATLING END, BUCKS SL9 7BB TEL +44 (0)1753 880824
MATERIAL: N/A	
FINISH: BLACK OR SILVER	TITLE: CABINET MOUNT COLUMN
UNLESS OTHERWISE SPECIFIED: DIMENSIONS ARE IN MILLIMETRES TOLERANCES: LINEAR: X. ±1.0mm X.X ±0.25 mm X.XX ±0.10 mm ANGULAR: X.XX ±0.1°	DWG NO. PN080029XS — REV A
	SCALE : 1:1 — SHEET 1 OF 1 — A4